INTERNATIONAL STANDARD

ISO 8062

Second edition
1994-04-01

Castings — System of dimensional tolerances and machining allowances

Pièces moulées — Système de tolérances dimensionnelles et surépaisseurs d'usinage

Reference number
ISO 8062:1994(E)

Foreword

ISO (the International Organization for Standardization) is a worldwide federation of national standards bodies (ISO member bodies). The work of preparing International Standards is normally carried out through ISO technical committees. Each member body interested in a subject for which a technical committee has been established has the right to be represented on that committee. International organizations, governmental and non-governmental, in liaison with ISO, also take part in the work. ISO collaborates closely with the International Electrotechnical Commission (IEC) on all matters of electrotechnical standardization.

Draft International Standards adopted by the technical committees are circulated to the member bodies for voting. Publication as an International Standard requires approval by at least 75 % of the member bodies casting a vote.

International Standard ISO 8062 was prepared by Technical Committee ISO/TC 3, *Limits and fits*.

This second edition cancels and replaces the first edition (ISO 8062:1984), which has been technically revised.

Annexes A, B and C of this International Standard are for information only.

© ISO 1994
All rights reserved. Unless otherwise specified, no part of this publication may be reproduced or utilized in any form or by any means, electronic or mechanical, including photocopying and microfilm, without permission in writing from the publisher.

International Organization for Standardization
Case Postale 56 • CH-1211 Genève 20 • Switzerland

Printed in Switzerland

Introduction

This International Standard relates to a system of tolerance grades and machining allowance grades for cast metals and their alloys.

The tolerance specified for a casting may determine the casting method. It is therefore recommended, before the design or the order is finalized, that the customer liaise with the foundry to discuss

a) the proposed casting design and accuracy required;

b) machining requirements;

c) method of casting;

d) the number of castings to be manufactured;

e) the casting equipment involved;

f) any special requirements, for instance, datum target systems, individual dimensional tolerances, geometrical tolerances, fillet radii tolerances and individual machining allowances;

g) whether any other standard is more appropriate for the casting.

NOTE 1 Further investigation on metallic permanent moulds (gravity- and low-pressure), pressure die castings and investment castings should be carried out.

Because the dimensional accuracy of a casting is related to production factors, tolerance grades which can be achieved for various methods and metals are described in annex A for

a) long series and mass production, where development, adjustment and maintenance of casting equipment make it possible to achieve close tolerances;

b) short series and single production.

Information on typical required machining allowance grades is given in annex B.

RMC Casting Foundry www.steel-foundry.com

Castings — System of dimensional tolerances and machining allowances

1 Scope

This International Standard specifies a system of tolerance grades and required machining allowance grades for the dimensions of castings. It is applicable to the dimensions of cast metals and their alloys produced by various casting manufacturing processes [but see also Introduction g) and clause 5].

This International Standard applies both to general tolerances and/or required machining allowances given on a drawing and to individual tolerances and/or required machining allowances which are shown immediately following a specific dimension (see clause 11).

The system specified applies when the foundry provides the pattern or die equipment or accepts responsibility for proving it.

2 Normative references

The following standards contain provisions which, through reference in this text, constitute provisions of this International Standard. At the time of publication, the editions indicated were valid. All standards are subject to revision, and parties to agreements based on this International Standard are encouraged to investigate the possibility of applying the most recent editions of the standards indicated below. Members of IEC and ISO maintain registers of currently valid International Standards.

ISO 286-1:1988, *ISO system of limits and fits — Part 1: Bases of tolerances, deviations and fits.*

ISO 1302:1992, *Technical drawings — Method of indicating surface texture.*

3 Definitions

For the purposes of this International Standard, the following definitions apply.

3.1 basic dimension: Dimension of a raw casting before machining (see figure 1), the necessary machining allowance being included (see figure 2).

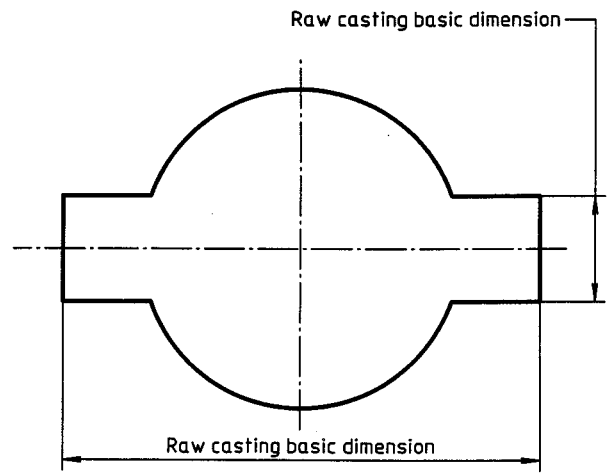

Figure 1 — Drawing indications (see clause 4)

Custom Casting Parts, CNC Machining Services info@steel-foundry.com

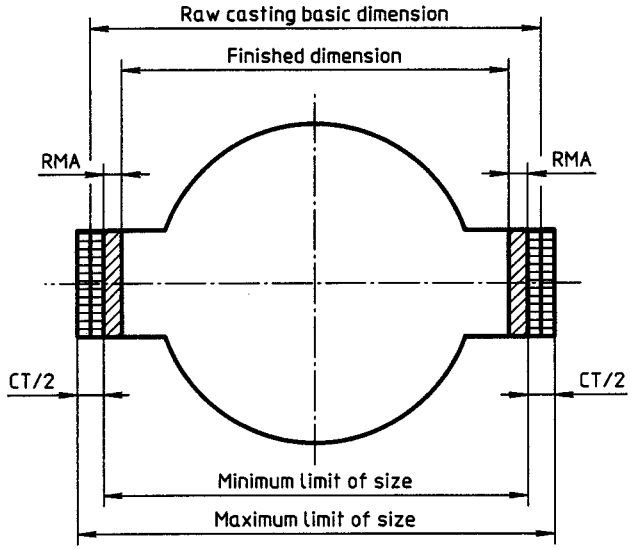

Figure 2 — Tolerance limits

3.2 dimensional tolerance: [See ISO 286-1].

3.3 required machining allowance, RMA: On raw castings, a material allowance to permit the removal of the effects of casting on the surface by subsequent machining and to allow the achievement of the desired surface texture and the necessary accuracy of dimension.

With cylindrical features or machining on both sides, the RMA is taken into account twice (see figures 5 and 6).

3.4 mismatch: Relative displacement of surfaces of a casting owing to inaccuracies in the constituent parts of multipart moulds (see figure 3).

3.5 draft angle (taper): Additional slope of shaping elements (e.g. on enveloping surfaces) necessary to facilitate the removal of a casting from a mould or die, or a pattern from a mould, or the parts of a permanent mould from each other.

4 Dimensioning

With the exception of dimensioning of wall thickness (where a chain of two dimensions may exist), chain dimensioning shall be avoided.

5 Tolerance grades

There are 16 casting tolerance grades, designated CT1 to CT16 (see table 1).

Dimensions for which general tolerances are not suitable shall be allocated individual tolerances.

While work is proceeding to obtain definite tolerance information for metallic permanent mould castings (gravity- and low-pressure), pressure die castings and investment castings, other more appropriate tolerance standards, e.g. national standards, may be employed for these particular processes.

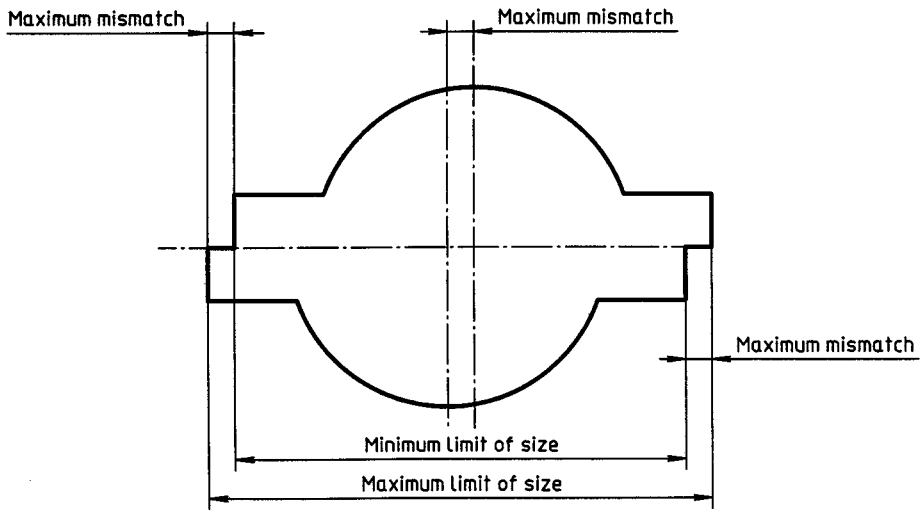

Figure 3 — Maximum mismatch

6 Mismatch

Unless otherwise specified, mismatch shall lie within the tolerance shown in table 1 (see figure 3). When it is important to restrict further the value of mismatch, the maximum value shall be stated on the drawing (see 11.1).

7 Wall thickness

Unless otherwise specified, the tolerance for wall thickness in grades CT1 to CT15 shall be one grade coarser than the general tolerance for other dimensions; for example, if there is a general tolerance on a drawing of CT10, the tolerance on wall thicknesses shall be CT11.

8 Tapered features

Where a design requires a tapered feature (e.g. feature with a draft angle), the tolerance shall be applied symmetrically along the surface (see figure 4).

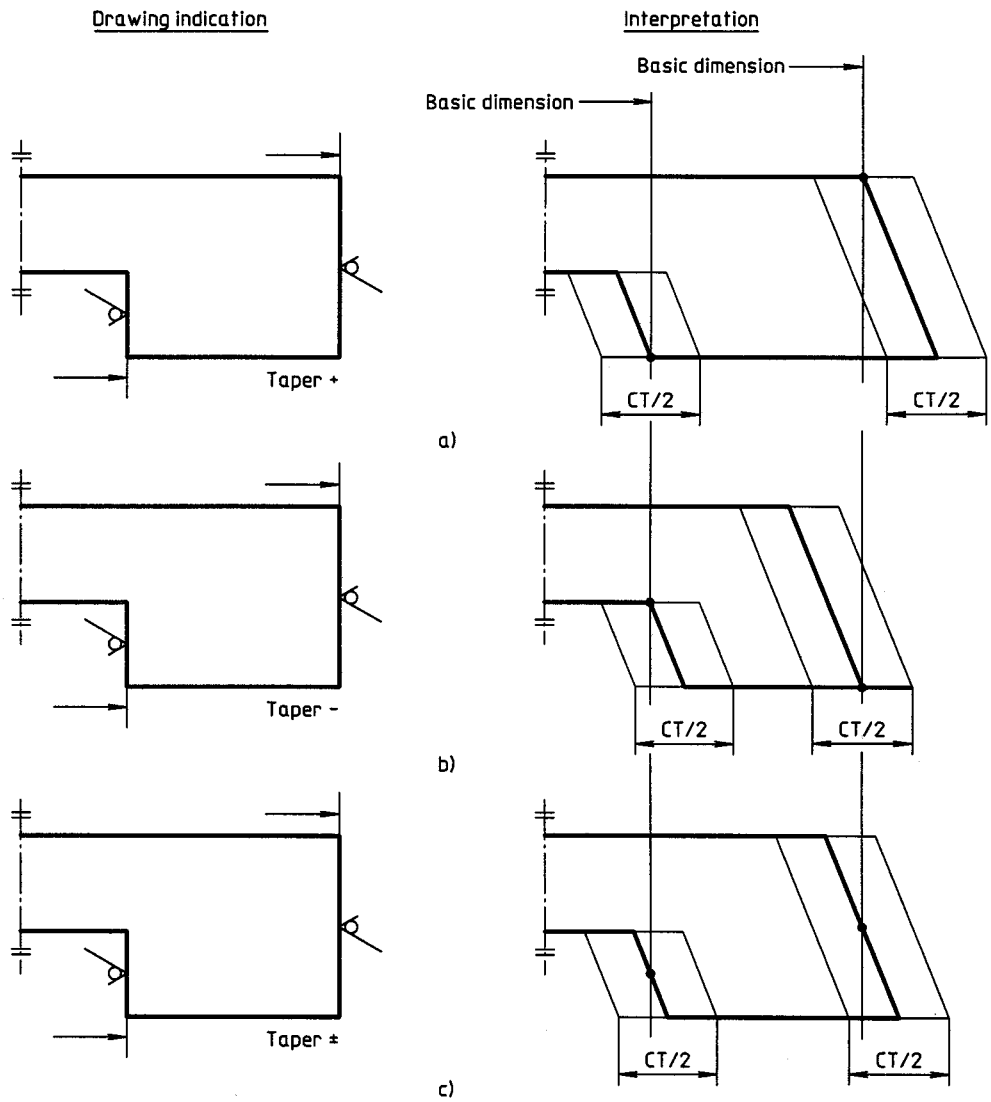

Figure 4 — Tolerance zone on tapered features

The drawing shall specify generally whether the taper shall be added to, subtracted from or averaged to the material, e.g.

taper +, figure 4 a)

taper −, figure 4 b)

taper ±, figure 4 c)

Tapers for particular surfaces arranged differently from the general arrangement of taper of the drawing shall be indicated individually at the surface, e.g. + ∢ .

For dimensions to be machined, "taper +" shall be applied, irrespective of the general drawing specification for taper, in order that the finished dimensions can be achievable.

9 Position of tolerance zone

The tolerance zone, unless otherwise stated, shall be symmetrically disposed with respect to a basic dimension, i.e. with one half on the positive side and one half on the negative side (see figure 2).

When agreed between manufacturer and purchaser for specific reasons, the tolerance zone may be asymmetric. In such a case the tolerance shall be stated individually, following the basic dimension.

10 Required machining allowances, RMA

10.1 General

Unless otherwise specified, the required machining allowance is valid for the entire raw casting, i.e. only one value is specified for all surfaces to be machined, and this shall be selected from the appropriate dimension range according to the largest overall dimension of the finished casting after final machining (see figure 9).

The maximum dimension of a feature, as cast, shall not exceed the finished dimension plus the required machining allowance plus the total casting tolerance (see figure 2 and figures 5 to 8). When applicable, the taper shall be considered additionally, as shown in figure 4.

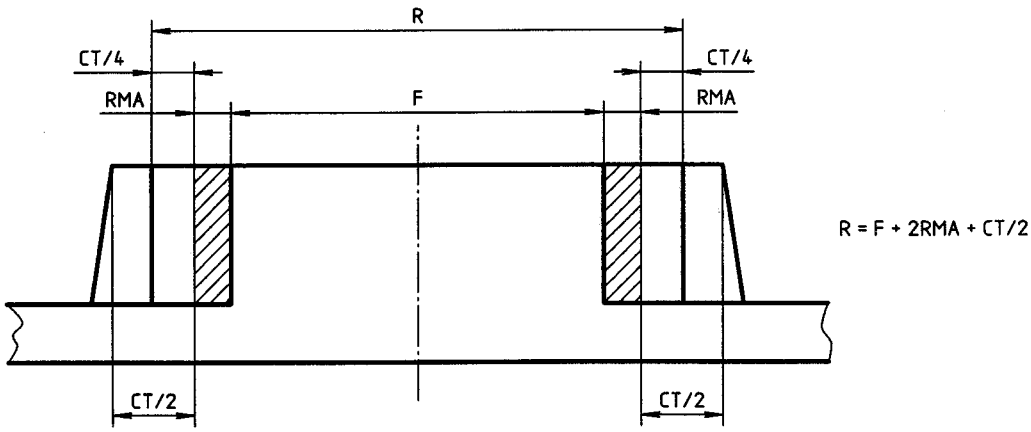

R = Raw casting basic dimension

F = Dimension after final machining

RMA = Required machining allowance

CT = Casting tolerance

Figure 5 — External machining of boss

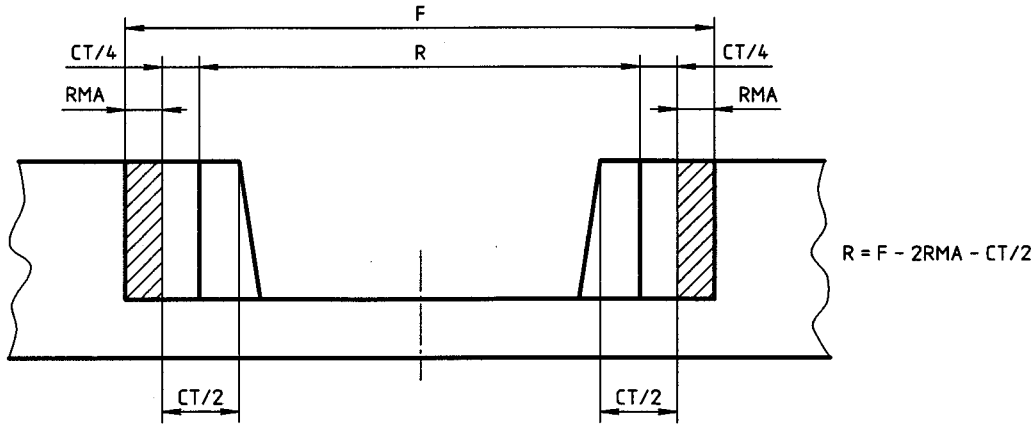

Figure 6 — Internal machining

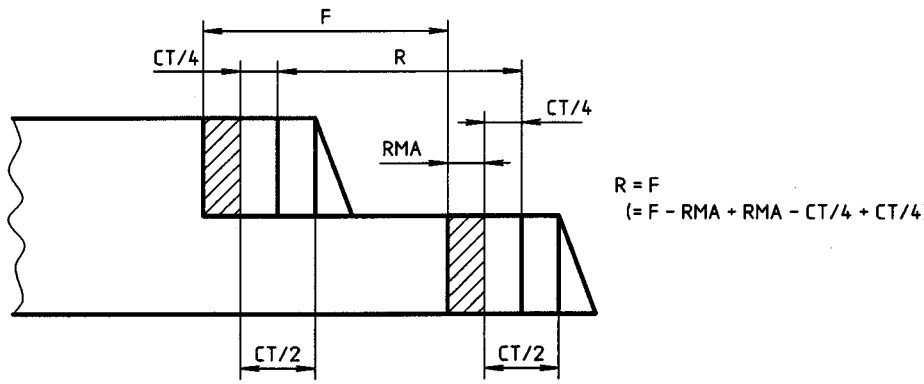

Figure 7 — Machining of step dimension

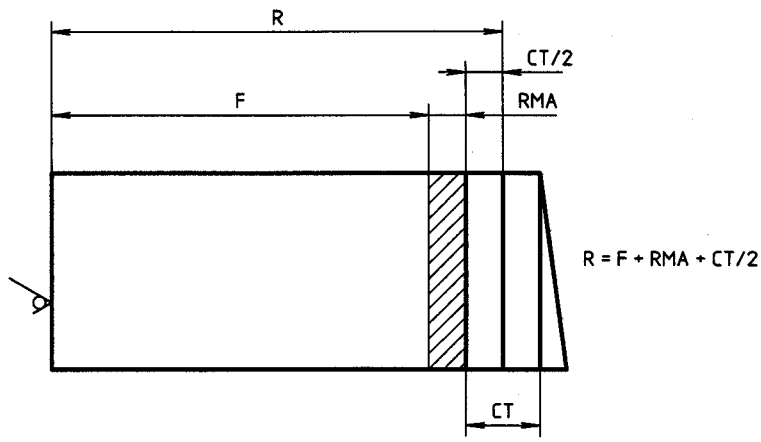

Figure 8 — Machining on one side of feature

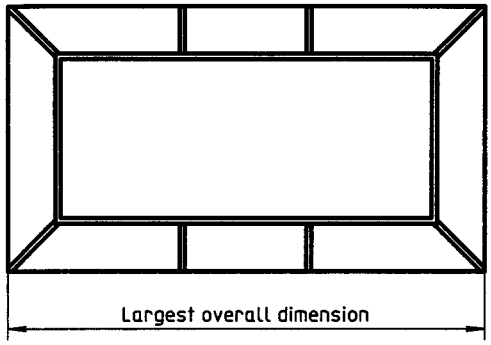

Figure 9 — Largest overall dimension of the casting after final machining

10.2 Grades of required machining allowance

There are 10 grades of required machining allowance, designated A to K (see table 2).

b) if further restriction of the mismatch is required (see clause 4);

EXAMPLE

"General tolerances ISO 8062 - CT12 - maximum mismatch 1,5"

c) if individual tolerances are required following the basic dimension.

EXAMPLE

"95 ± 3" or "200 $^{+5}_{-3}$"

11.2 Indication of machining allowances

The surfaces to be machined, the required machining allowance value and, in brackets, the required machining allowance grade shall be stated on the drawing. These shall be taken into account when the pattern or die equipment is being produced.

Required machining allowances shall be stated on the

Table 2 — Required machining allowances (RMA)

Largest dimension[1] mm		Required machining allowance mm									
		Required machining allowance grade									
over	up to and including	A[2]	B[2]	C	D	E	F	G	H	J	K
—	40	0,1	0,1	0,2	0,3	0,4	0,5	0,5	0,7	1	1,4
40	63	0,1	0,2	0,3	0,3	0,4	0,5	0,7	1	1,4	2
63	100	0,2	0,3	0,4	0,5	0,7	1	1,4	2	2,8	4
100	160	0,3	0,4	0,5	0,8	1,1	1,5	2,2	3	4	6
160	250	0,3	0,5	0,7	1	1,4	2	2,8	4	5,5	8
250	400	0,4	0,7	0,9	1,3	1,8	2,5	3,5	5	7	10
400	630	0,5	0,8	1,1	1,5	2,2	3	4	6	9	12
630	1 000	0,6	0,9	1,2	1,8	2,5	3,5	5	7	10	14
1 000	1 600	0,7	1	1,4	2	2,8	4	5,5	8	11	16
1 600	2 500	0,8	1,1	1,6	2,2	3,2	4,5	6	9	13	18
2 500	4 000	0,9	1,3	1,8	2,5	3,5	5	7	10	14	20
4 000	6 300	1	1,4	2	2,8	4	5,5	8	11	16	22
6 300	10 000	1,1	1,5	2,2	3	4,5	6	9	12	17	24

1) Largest overall dimension of the casting, after final machining.

2) Grades A and B shall only be applied in special cases, for example with series production in which the pattern equipment, the casting procedure and the machining procedure with regard to clamping surfaces and datum surfaces or targets have been agreed between the customer and the foundry.

Annex A
(informative)

Casting tolerances

A.1 Tables A.1 and A.2 show tolerance grades which can normally be expected in casting processes. As indicated in the Introduction to this International Standard, the accuracy of a casting process is dependent upon many factors, including:

a) complexity of the design;

b) type of pattern equipment or die equipment;

c) the metal or alloy concerned;

d) the condition of patterns or dies;

e) the foundry working methods.

A.2 For long series of repetitive work, it may be possible to make adjustments and to control core positions carefully to achieve tolerance grades finer than those indicated in table A.1.

A.3 In sand casting for short production series and for single castings, it is generally impractical and uneconomical to use metal patterns and to develop equipment and casting procedures resulting in narrow tolerances. The wider tolerances for this class of manufacture are shown in table A.2.

A.4 Tolerances in table 1 of this International Standard are based on foundry data from a number of countries. These data were used to construct a series of smooth curves using increments of

$\sqrt{2}$ for grades CT1 to CT13, and

$\sqrt[3]{2}$ for grades CT13 to CT16.

Many dimensions of a casting are affected by the presence of a mould joint or a core, requiring increased dimensional tolerance. Since the designer will not necessarily be aware of the mould and core layout to be used, increases have already been included in table 1.

Table A.1 — Tolerance grades for long-series production raw castings

Method	Tolerance grade CT								
	Casting material								
	Steel	Grey iron	S. G. iron	Malleable iron	Copper alloys	Zinc alloys	Light-metal alloys	Nickel-based alloys	Cobalt-based alloys
Sand cast, hand-moulded	11 to 14	11 to 14	11 to 14	11 to 14	10 to 13	10 to 13	9 to 12	11 to 14	11 to 14
Sand cast, machine-moulded and shell moulding	8 to 12	8 to 12	8 to 12	8 to 12	8 to 10	8 to 10	7 to 9	8 to 12	8 to 12
Metallic permanent mould (gravity and low-pressure)	Work is proceeding to establish appropriate data. Meanwhile consultation should take place between the foundry and the customer to agree upon values used.								
Pressure die casting									
Investment casting									

NOTES

1 The tolerance grades indicated are those which can normally be held for castings produced in long series and when production factors influencing the dimensional accuracy of the casting have been fully developed.

2 This International Standard can also be applied to processes and materials not cited in this table by agreement between the producer and the user of the castings.

Table A.2 — Tolerance grades for short-series or single-production raw castings

Method	Moulding material	Tolerance grade CT							
		Casting material							
		Steel	Grey iron	S. G. iron	Malleable iron	Copper alloys	Light-metal alloys	Nickel-based alloys	Cobalt-based alloys
Sand cast, hand-moulded	Clay-bonded	13 to 15	13 to 15	13 to 15	13 to 15	13 to 15	11 to 13	13 to 15	13 to 15
	Chemically bonded	12 to 14	11 to 13	11 to 13	11 to 13	10 to 12	10 to 12	12 to 14	12 to 14

NOTES

1 The tolerance grades indicated are those which can normally be held for sand castings produced in short series or as single castings.

2 The values in this table apply generally to basic dimensions greater than 25 mm. For smaller dimensions, finer tolerances can normally be economically and practically held as follows:

a) basic dimension up to 10 mm: three grades finer;

b) basic dimension 10 mm to 16 mm: two grades finer;

c) basic dimension 16 mm to 25 mm: one grade finer.

3 This International Standard can also be applied to processes and materials not cited in this table by agreement between the producer and the user of the castings.

Annex B
(informative)

Required machining allowance grades (RMA)

RMA grades recommended for particular metals and alloys and manufacturing methods are presented in table B.1.

Table B.1 — Typical required machining allowance grades for raw castings

Method	Required machining allowance grade								
	Casting material								
	Steel	Grey iron	S. G. iron	Malleable iron	Copper alloys	Zinc alloys	Light-metal alloys	Nickel-based alloys	Cobalt-based alloys
Sand cast, hand-moulded	G to K	F to H	F to H	F to H	F to H	F to H	F to H	G to K	G to K
Sand cast, machine-moulded, and shell moulding	F to H	E to G	E to G	E to G	E to G	E to G	E to G	F to H	F to H
Metallic permanent mould (gravity and low-pressure)	—	D to F	D to F	D to F	D to F	D to F	D to F	—	—
Pressure die casting	—	—	—	—	B to D	B to D	B to D	—	—
Investment casting	E	E	E	—	E	—	E	E	E

NOTE — This International Standard can also be applied to processes and materials not given in this table by agreement between the producer and the user of the castings.

Annex C
(informative)

Bibliography

[1] ISO 1101:1983, *Technical drawings — Geometrical tolerancing — Tolerancing of form, orientation, location and run-out — Generalities, definitions, symbols, indications on drawings.*

[2] ISO 5459:1981, *Technical drawings — Geometrical tolerancing — Datums and datum-systems for geometrical tolerances.*

[3] ISO 10135:—[1], *Technical drawings — Simplified representation of moulded, cast and forged parts.*

1) To be published.

PMC Casting Foundry www.steel-foundry.com © ISO

ICS 17.040.10

Descriptors: castings, metallurgical products, dimensions, dimensional tolerances, machining tolerances.

Price based on 13 pages

Custom Casting Parts, CNC Machining Services info@steel-foundry.com